Nov 2025

CYGNUS

Smart Edge Appliance | IO Expansion

tor.ai®

www.tor.ai

Tor Cygnus

CYGNUS

The Cygnus 901 Smart Edge Appliance is a robust, next-generation IoT platform combining powerful computing, industrial-grade reliability, and versatile connectivity options like USB, HDMI, Ethernet, CANBUS, LTE, Bluetooth, and Wi-Fi. Built to run advanced AI algorithms at the edge, Cygnus 901 supports multi-protocol integration and operates in harsh environments up to 70°C, making it ideal for industrial automation, commercial IoT, and edge computing tasks.

The Cygnus 902 IO Expansion module enhances master controllers and edge solutions by extending their analog and digital IO capabilities. With flexible deployment and seamless integration, Cygnus 902 is designed for industrial automation and building management, delivering scalable IO density and robust connectivity for reliable device monitoring and control in demanding

Applications

- Edge computing & IoT gateways
- Industrial automation & control
- Production & shop floor optimization
- Remote monitoring & diagnostics
- Building automation & surveillance
- Retail & Point-of-Sale (POS) solutions
- Smart grid & energy optimization
- EV charging & power management

Benefits

Effortless integration with diverse systems for seamless interoperability and scalability

Preloaded SDK, popular programming language support, and APIs

Enable accurate decision-making with low-latency real-time insights

Deliver durable performance in harsh environments with a rugged design

Adapt to future business needs with scalable upgrade and expansion support

Reduce downtime and costs through remote monitoring and control for improved efficiency

901 Key features

CYGNUS

High storage capacity, 4G cellular connectivity
32GB flash storage, 2GB & 3GB (Optional) RAM , Nano SIM

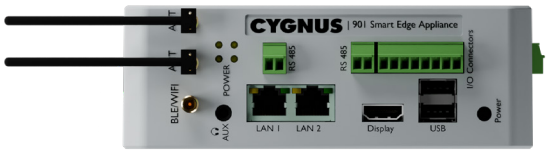

Versatile connectivity
USB 2.0, Ethernet (RJ45), RS485 & HDMI, 4 digital inputs, 1 analog input, and 4 digital outputs

Audio support
3.5 mm AUX port

Communication
Wi-Fi and bluetooth 5.0

Compact design& Flexible mounting options
150x115x52 mm, Supports DIN rail & table top

Multi-network antenna
3 external antennas for GSM, GPS, BLE, and Wi-Fi

902 Key features

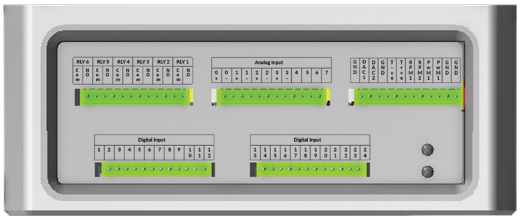

Multiple input & output interfaces
30 digital inputs, 8 analog input, and 10 digital outputs

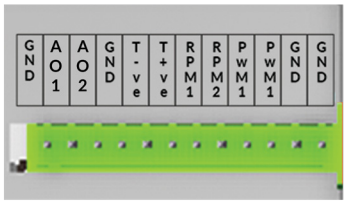

Additional generic IO
2 AO, 2 Counter, 2 PWM

Architecture

CYGNUS

Industrial automation

Machine vision

SCADA | PLC

Energy & utilities

Smart grids

Genset

Transportation & logistics

EV charging controller

Fleet management

Smart cities & infrastructure

Smart parking

City surveillance | ITMS

Retail & POS systems

POS systems

Store optimization

Oil & gas

Pipeline monitoring

Detects anomalies

Modbus: RS-485, RS-422

Ethernet

Wi-Fi

BLE 5.0

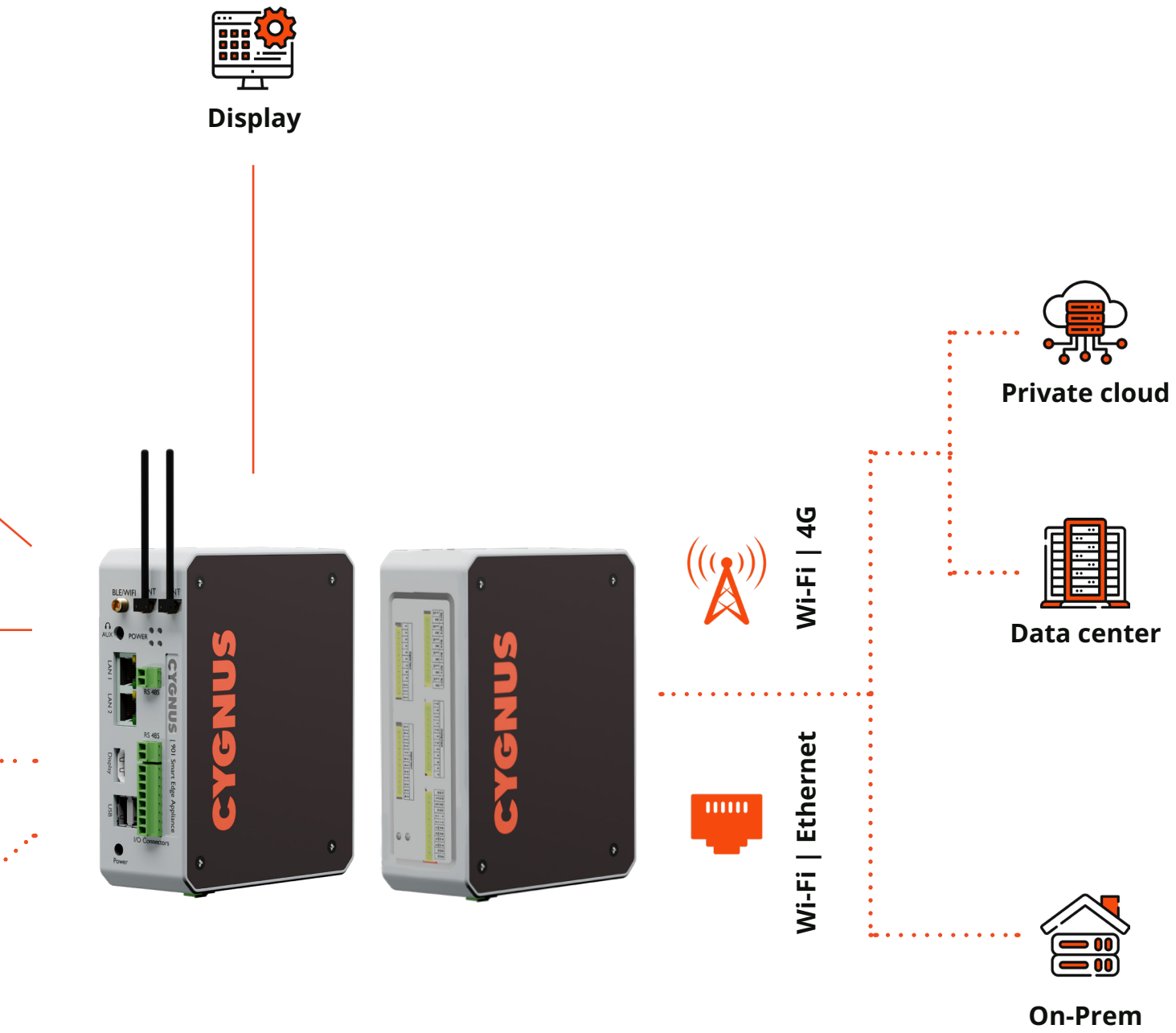

Wired Wireless

Technical specification

CYGNUS

Model	901 Smart Edge Appliance
Power Supply	
Input Voltage	5 V DC input via SMPS
Power consumption	4A via SMPS
Connector	2 Pin Terminal Block
SDK	
Operating System	Linux OS Yocto (Standard), Android 13 (Optional)
Processor	Qualcomm® QCM2290 quad-core ARM® Cortex®-A53@2.0 GHz 64-bit processor with built-in Adreno™ 702 GPU
Supported Programming Languages (for users to develop their own Applications)	C, C++, Python, Java, Node.js etc.
Flash Available for SDK	32GB
RAM Available for SDK	2GB (Standard), 3GB (Optional)
Network Protocols	MODBUS (TCP/IP, RTU), PROFINET, OPCUA (Client), BACnet (Client)
Interfaces	
USB	USB 2.0 - 2nos.
Ethernet	RJ45 - 2nos.
Serial	RS485 - 2 Unit
HDMI	HDMI port - 1 Unit
Analog Input	2 Nos.(Voltage), Volatge 0 to 10V; Resolution: 15-bit
Digital Input	4 Nos. (5 to 24 VDC), Types: Positive
Digital Output	4 Nos: Sinking Mode
Audio	3.5 mm AUX to support stereo speaker
Antenna	3 Units External Antenna - (GSM, GPS, BLE/WIFI)
Cellular	4G
SIM Slot	Nano SIM - 1 unit
Location Services	GNSS/GPS
Wifi	IEEE 802.11 family of standards
BLE	BLE 5.0
led Indicators	Power, Network(outbound service)
BLE	BLE 5.0
LED Indicators	Power, Network(outbound service)
Physical Specification	
Dimension	150x108x60 mm
Mounting	Din Rail
Operating Temp	-10°C to 60°C
Additional Features	
Application Updates	Use SDK library to create custom packages and build custom firmware images
VPN & Tunneling Protocols	Available

Model	902 IO Expansion
Power Supply	
Input Voltage	5 V DC input via SMPS, Connector- 2 Pin Terminal Block
Power consumption	2A via SMPS
Interfaces	
Serial	RS485 - 1 Unit
Analog Input	Voltage 0 to 30V; Current 4 to 20mA; Resistive -Thermistor, Resolution: 16-bit Options available: 8nos. of Voltage based / 8nos. of Resistive based / 4nos. of Current based + 4nos. Resistive / 4nos. Current based + 4nos. Voltage based / 4nos. Voltage based + 4nos. Resistive based
Digital Input	30 Nos. (5 to 24 VDC) Types: Positive only (Negative & Floating BOM configurable and can be taken as per requirement)
Digital Output	10Nos. (5 to 24 VDC), Type: Relay Rated Current Output: Nominal 0.5 A per channel
Analog Output	2 Nos (0 to 10V), Resolution: 12-bit

Enclosure dimensions

CYGNUS

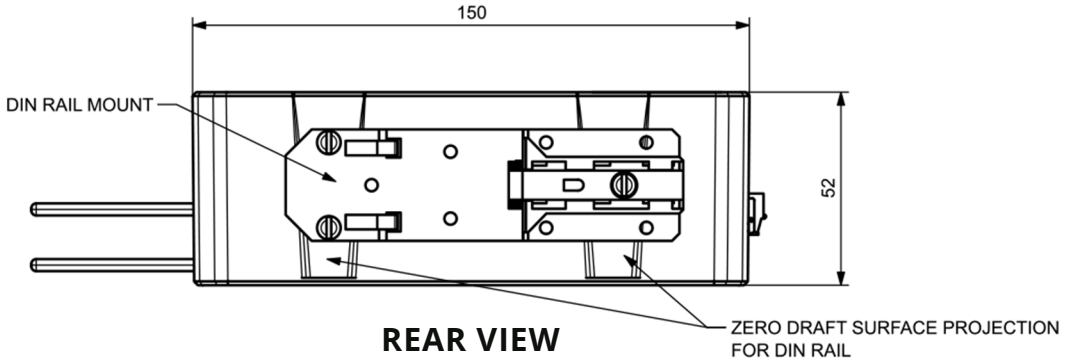

REAR VIEW

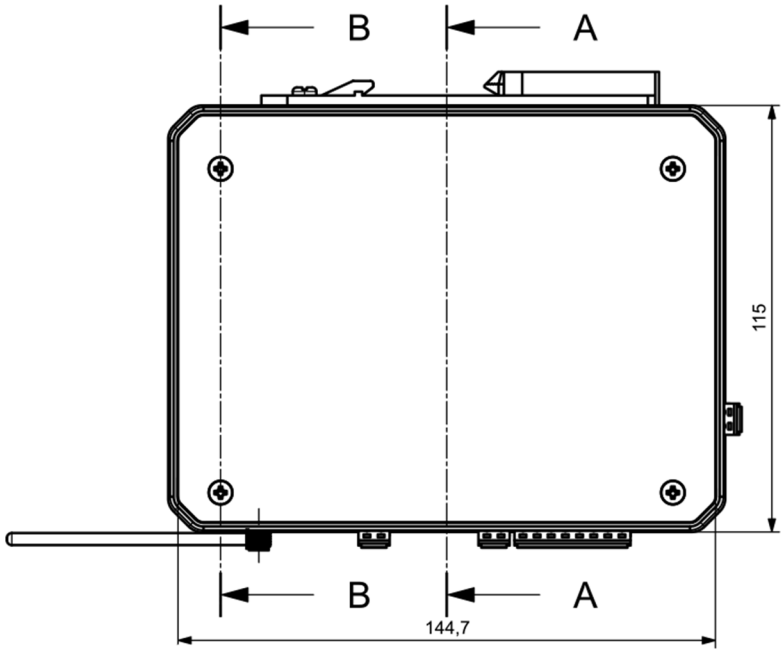

TOP VIEW

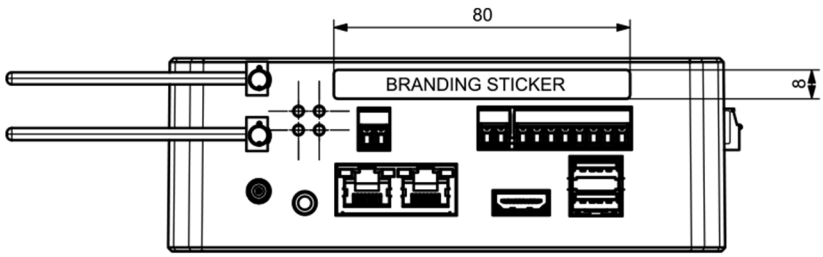

FRONT VIEW

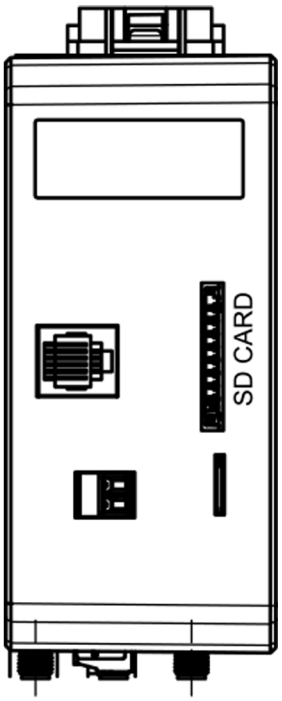

BOTTOM VIEW

Capabilities

1 RnD

Technology refinement by 100+ inhouse team of engineers and subject matter experts in embedded systems, hardware development, type testing - validation, application and platform development.

2 Application & Analytics

Expertise in developing and deploying customized applications with platform and database development along with managing infrastructure and security.

3 Manufacturing

Our hardware is manufactured in state-of-the-art pick and place setup for board building along with code burning bank for building multiple boards in parallel.

Tor.ai Limited

HQ - Pune

Bangalore | Delhi NCR | Dubai | Nairobi

Chennai | Ahmedabad | Kolkata | Mumbai

: +91 937 346 7304

: contactus@tor.ai

: www.tor.ai